BLACK BOX®
NETWORK SERVICES

Media Converters

LAN to MAN and beyond—making your network better

Achieve significant cost savings by integrating fiber optic cabling and active equipment into existing copper-based, structured cabling systems.

Standalone Converters | Modular Chassis Systems | PC Card Converters

724-746-5500 | blackbox.com

Table of Contents

Introduction 3
Media Conversion in the Local Area Network 3
Converter Types 3
Connecting Different Media Types in the LAN 4
Connecting Different Media and Speeds in the LAN 4
Media Converters and Fiber Backbone 5
Fiber-to-the-Desktop (FTTD) 6
Bridging Two LANs over Fiber 6
New Single Strand Fiber Applications 7
Benefits of Media Conversion in the LAN 7
Media Converters in the MAN and Beyond 8
Optical Ethernet 8
Provisioning Optical Circuits 9
Media Converters are Flexible 9
Need for Management 10
Benefits of Optical Ethernet and Media Converters in the MAN 11
Conclusion 11
About Black Box 11

We're here to help! If you have any questions about your application, our products, or this White Paper, contact Black Box Tech Support at **724-746-5500** or go to **blackbox.com** and click on "Talk to Black Box."
You'll be live with one of our technical experts in less than 20 seconds.

Introduction

Media converters play an important role in today's multiprotocol, mixed-media local area networks (LANs). For example, LAN administrators can deploy media converters to integrate fiber optic cabling and active equipment into existing copper-based, structured cabling systems while achieving significant cost savings.

Media converters are also becoming a critical piece of data networks outside the LAN, as electrical-to-optical conversion technology is enabling service providers to speed up the deployment of and minimize the cost of provisioning fiber-to-the-subscriber, and offering MAN access and data transport services to enterprise customers. We will discuss the benefits of Ethernet as an end-to-end transport protocol, and illustrate how media converters are lighting up the first mile, enabling Tier 1 carriers, MSOs, CLECs, and "EtherLECs" to offer their customers a transparent WAN interface.

Media Conversion in the Local Area Network

Introduced to the industry over a decade ago, media converters are simple networking devices that make it possible to connect two dissimilar media types, such as twisted pair with fiber optic cabling.

Converter Types

Today's converters support many different data communication protocols—including Ethernet, Fast Ethernet, Gigabit Ethernet, T1/E1/J1, DS3/E3—as well as multiple cabling types such as coax, twisted pair, multimode and single-mode fiber optics. Media converter types range from small standalone devices and PC card converters to high-port-density chassis systems that offer many advanced features for network management. Simple network management protocol (SNMP) enables proactive management of link status, monitoring chassis environmental statistics, and sending traps to network managers in the event of a fiber break or even link loss on the copper port. The ability to quickly identify and isolate problems allows LAN administrators to maximize network uptime.

Chassis systems provide unparalleled flexibility and enable mixing slide-in converters as required. For example, when combined with a 10/100/1000 Ethernet switch, LAN administrators can use modular converters to satisfy a wide range of requirements in network connectivity and distance. Modular converters can be installed to convert copper switch ports to multimode or single-mode fiber as needed.

Copper-To-Fiber Conversion

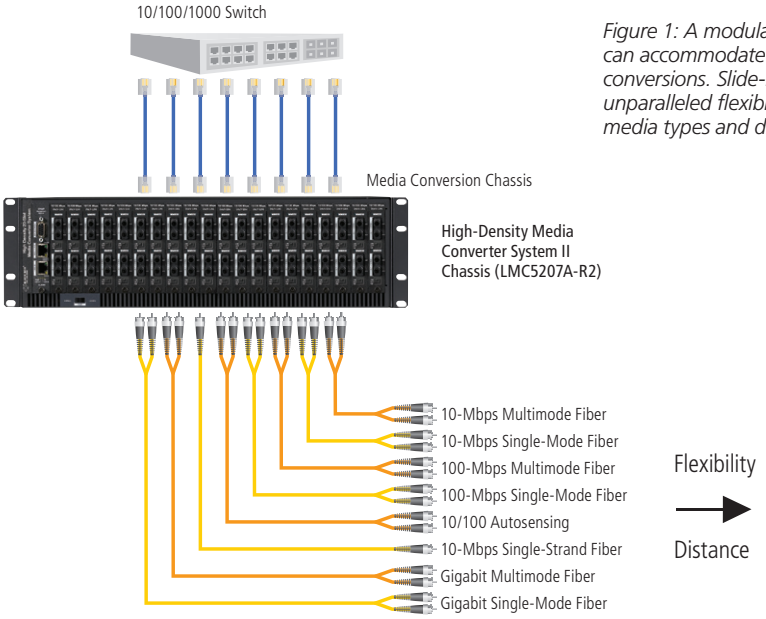

Figure 1: A modular chassis system can accommodate up to 20 managed conversions. Slide-in converters provide unparalleled flexibility for combining media types and distance.

Connecting Different Media Types in the LAN

Organizations must accommodate the continuing growth in data traffic and the increasing demand for bandwidth while leveraging the investment in the existing network infrastructure. Instead of costly "forklift upgrades" and rewiring for fiber optics, media converters can extend the productive life of the existing structured cabling as well as the active equipment. Media converters can be used anywhere in the network to integrate fiber optics with the existing copper wiring and equipment to support new applications, technologies, and future growth.

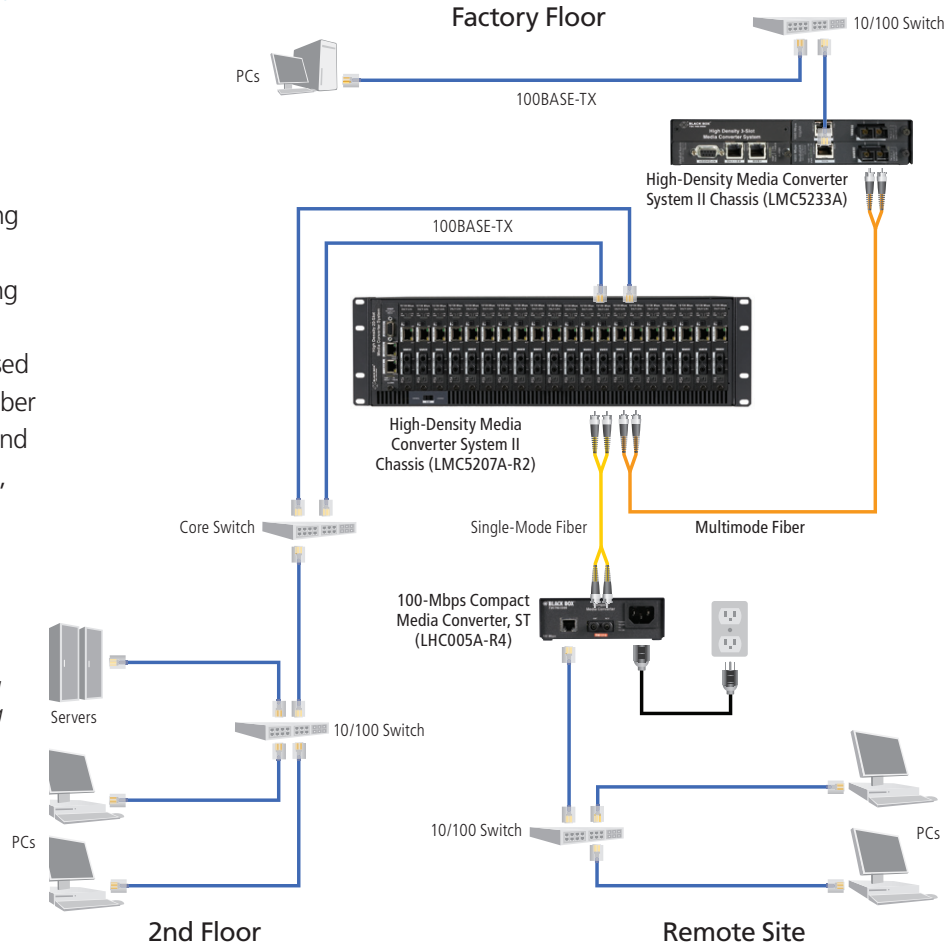

Figure 2: Media converters can be used in a LAN to extend the productive life of the legacy wiring plant by connecting it to new devices with fiber optic media interfaces.

Connecting Different Media and Speeds in the LAN

When connecting legacy 10BASE-T network segments to a newer 100BASE-TX or 100BASE-FX Fast Ethernet infrastructure, switching media converters are the perfect solution. Switching media converters feature a 10/100 autonegotiating copper port and a Fast Ethernet fiber port. For example, existing half-duplex hubs can be connected to 100BASE-TX Fast Ethernet network segments over 100BASE-FX fiber.

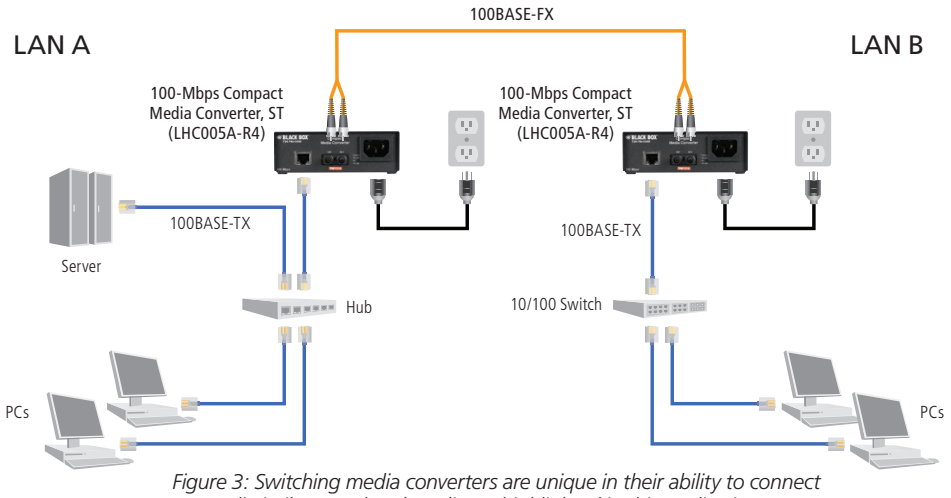

Figure 3: Switching media converters are unique in their ability to connect dissimilar speed and media, as highlighted in this application.

Media Converters and Fiber Backbone

Today, approximately 90% of structured LAN wiring is twisted pair with a distance limitation of 100 meters, or about 300 feet. While copper will continue to dominate the LAN in the foreseeable future, fiber optics is the only medium capable of supporting a virtually limitless amount of bandwidth. Multimode 62.5-micron or laser-optimized 50-micron fiber optic cabling is the logical choice for the LAN backbone, i.e., the cabling used to interconnect the telecommunications room and individual data closets. In the telecommunications room, network managers can deploy a core switch with 100BASE-TX or Gigabit Ethernet copper ports, which is more economical than fixed fiber ports or Small Form Factor Pluggable optical transceivers (SFPs). Media converters can be used to convert in the telecommunications room and again at the workgroup switch to interconnect the fiber backbone to the existing horizontal UTP plant.

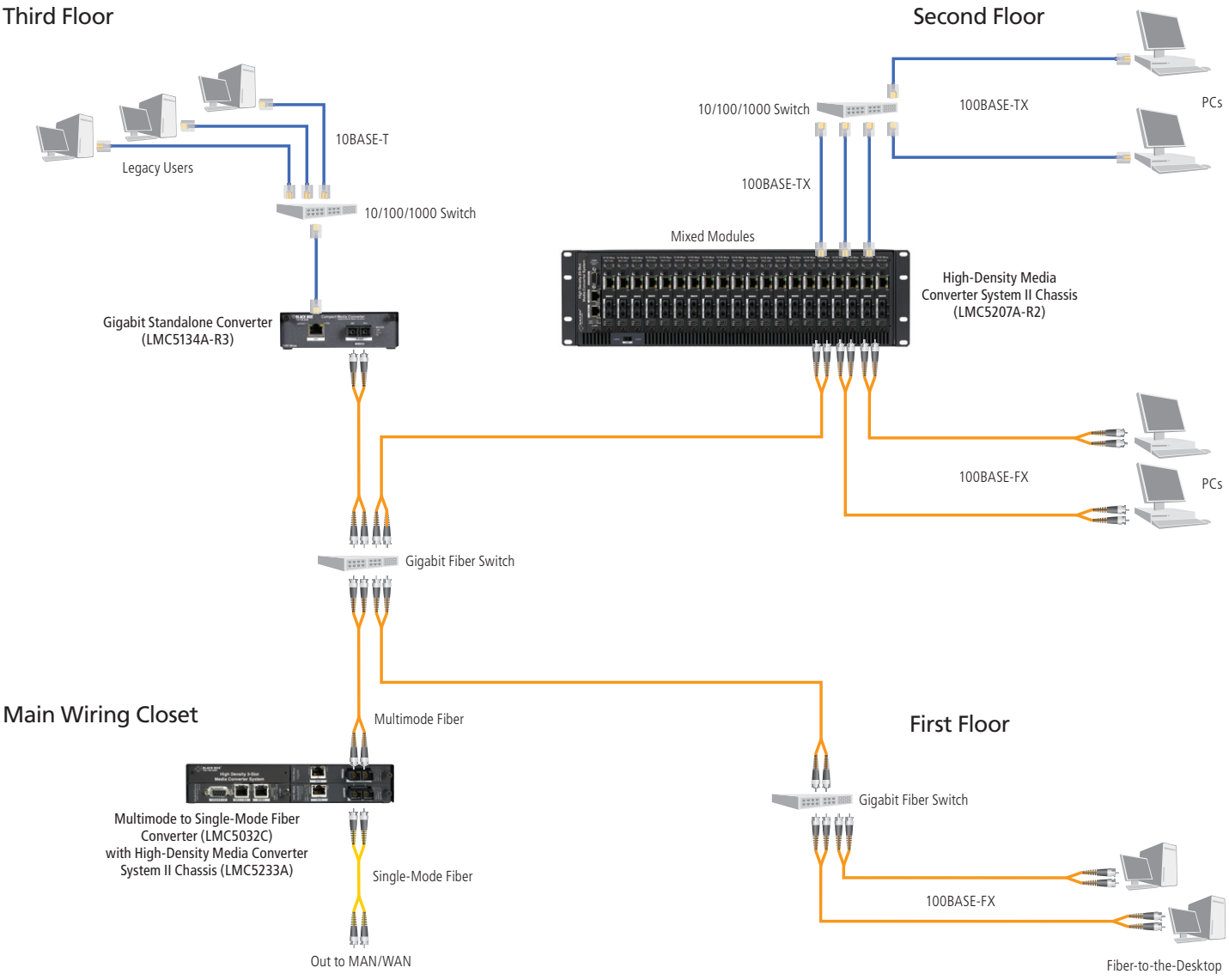

Figure 4: Media converters are a perfect combination with a 100BASE-SX or 1000BASE-SX multimode fiber backbone. Use them to connect workgroups in copper-based wiring segments or extend the reach of a fiber backbone with fiber mode converters up to 80 kilometers.

Fiber-to-the-Desktop (FTTD)

Already established in the LAN backbone at 100 Mbps and Gigabit speeds, multimode fiber is making further headway in the horizontal cabling plant to accommodate future applications such as streaming media, Voice over IP, and the subsequent demand for faster and faster desktop connections. Media converters are finding new use in the LAN by making FTTD cost effective. Instead of expensive fiber home runs requiring all-fiber switches, patch panels and network interface cards, organizations can reap the benefits of media converters and save money by converting in the telecommunications room and again at the desktop.

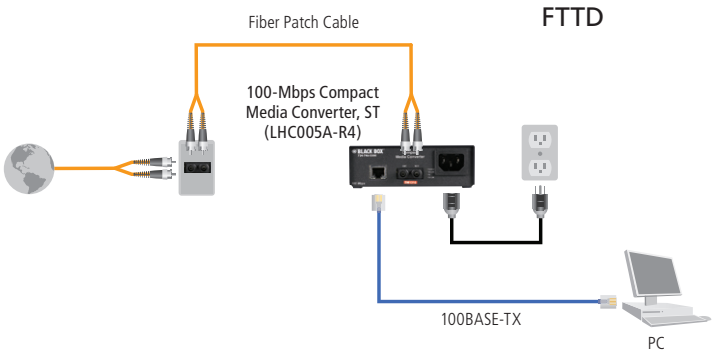

Figure 5: Media converters make FTTD a reality. Modular chassis are used to connect the existing switches to the new multimode horizontal fiber plant. Standalone or PC card media converters can be used at the desktop with standard 10/100 NICs to achieve further cost savings.

Bridging Two LANs over Fiber

When expanding the reach of the LAN to span multiple locations, media converters are useful in connecting multiple LANs to form one large "campus area network" that spans a limited geographic area. As premises networks are primarily copper-based, media converters can extend the reach of the LAN over single-mode fiber up to 130 kilometers with 1550-nm optics.

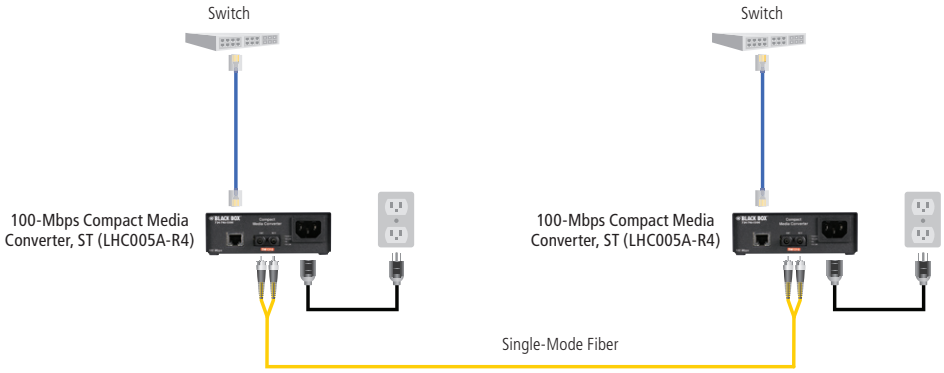

Figure 6: Connect two distant switches using single-mode fiber and two media converters.

New Single Strand Fiber Applications

The exponential growth of data traffic has turned the spotlight on Wavelength Division Multiplexing (WDM) technology. WDM is simply multiplexing two or more wavelengths on one strand of fiber in order to increase the transport capacity of optical fiber, and then de-multiplexing the data at the other end. While mostly associated with carrier backbone applications, WDM in the LAN is especially beneficial in situations where fiber is in limited supply or expensive to provision. New single strand fiber converters convert copper to fiber, but use only one strand of fiber, instead of two, to extend full-duplex data transmission up to 70 kilometers.

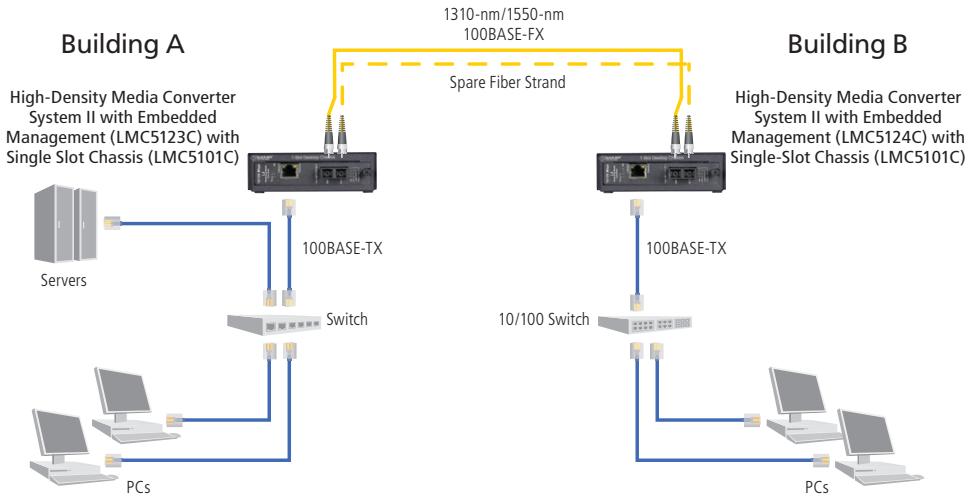

Figure 7: Single strand fiber media converters using WDM technology can effectively double fiber capacity by combining 1310-nm and 1550-nm wavelengths onto one strand of fiber. The spare fiber strand can immediately double the data traffic or be saved for future use.

Benefits of Media Conversion in the LAN

It reduces the overall networking cost when used with more cost-effective switches with multiple, fixed, RJ-45 copper ports instead of fiber ports. Network managers can convert only the selected copper ports for multimode or single-mode fiber as needed.

It protects the existing investment in the network. As physical layer devices, media converters can easily be located or relocated to other areas within the installation, further leveraging the original investment.

It extends the productive life of the legacy wiring plants of companies and organizations. It also keeps pace with evolving technology standards by being able to interconnect different devices supporting various media interfaces, whether it is twisted pair or single-mode or multimode fiber.

It provides a gradual migration path from copper to fiber, as well as from 10-Mbps Ethernet to 100-Mbps Fast Ethernet to Gigabit Ethernet. By adding a fiber segment into copper networks, network managers can also easily increase cabling distances and reduce electromagnetic interference.

It offers the flexibility of combining copper with 850-nm and 1300-nm multimode fiber and 1310-nm and 1550-nm single-mode fiber; slide-in media conversion modules for all cable types can reside in one media conversion chassis.

It eases network troubleshooting and minimizes downtime. For example, if one slide-in converter goes down, only that connection is affected. If a fixed port fiber switch goes down, as many as 24 connections are down simultaneously, while the faulty port is being repaired.

Media Converters in the MAN and Beyond

Most Local Area Networks have migrated to a Gigabit or at least a Fast Ethernet backbone with switched 10/100 connections to clients, printers, and file servers. Most U.S. businesses rely on copper T1 and T3 connections, or fiber ATM / SONET circuits, which are fast on the inside but slow on the outside, for WAN connectivity. These connections were designed for voice but were never intended to handle the exponentially growing Internet and data traffic, applications, or the protocols typically used in today's LAN. What's more, provisioning and maintaining these circuits, or upgrading from a T1 to a T3 connection, is an expensive and time-consuming proposition for both the service provider and the customer. It also requires significant capital investment at both the Point of Presence (POP) and the customer premises.

Ethernet is the dominant LAN protocol with over 95% market penetration. Ethernet equipment is readily available at reasonable prices, and it provides a migration path from 10 Mbps, to 100 Mbps and to Gigabit Ethernet. And, with the new 10-Gigabit Ethernet standard, the application space for Ethernet will logically expand from the LAN to the MAN, and eventually to the WAN.

Optical Ethernet

Optical Ethernet—i.e. transmitting Ethernet packets over optical fiber—is nothing new in private networks. LAN and enterprise campus network administrators have used Ethernet over optical fiber media for years to overcome the distance limitation of 100 m / 330 ft. when using copper-based cabling. By converting to fiber, distances up to 130 km are easily achieved with 1550- nm optics. Using media converters at both ends, LAN and campus network managers can build their own private MANs that tie all the buildings, and even remote locations, into one collision domain.

On the public network side, optical Ethernet has become an increasingly attractive option for high-speed Internet access and for MAN transport in recent years. The fundamental reason why Ethernet has emerged as a competitor to legacy ATM/SONET services is cost. Simplifying the network design and using low-cost Ethernet as an end-to-end LAN/MAN/WAN protocol is a win-win situation for both the service provider and the customer. This is how Ethernet won the LAN years ago; it was not necessarily the best technology, it was the most cost-effective and easily implemented.

Ethernet is also extremely efficient. Designed for data transport, it is well suited for Internet Protocol (IP), which is the fastest growing traffic type. SONET, for example, is based on time-division multiplexing, which is good for voice but does not adapt well to bursty IP traffic.

Another advantage of optical Ethernet is its scalability and the ease of throttling customer link speeds. While some competitive local exchange carriers (CLECs) offer either 10 Mbps or 100 Mbps for a flat fee, typically Layer 3 rate limiting is implemented at the POP switch to enable customers to purchase the bandwidth they need, when they need it. As requirements change, customers can subscribe to more bandwidth and get it within days instead of waiting for weeks to have their telco circuits upgraded. In some cases, customers can upgrade to a bigger pipe themselves by using the service provider software interface.

Today's metro switches can limit bandwidth in 1-Mbps increments, although some access equipment features even finer granularity and can throttle ingress/egress data throughput in 1-kbps increments all the way up to 1 Gbps. Ease of bandwidth control and fine granularity also enables new Ethernet-based services networks to attract and retain customers who realize the value of using and paying for the bandwidth as needed.

Provisioning Optical Circuits

Whereas residential FTTH deployments typically use point-to-multipoint distribution via passive optical networking for cost reasons, the network architecture in providing service to business customers is always point-to-point.

Media converters are deployed in the MAN to provide the physical layer connection and to bridge the bandwidth gap that exists between the LAN and MAN. While structured cabling in the LAN is typically either twisted-pair copper or multimode fiber, single-mode fiber is always used in the MAN. The best design is to use media converters at both ends of the first mile to provide the electrical-to-optical conversion from the POP switching router to single-mode fiber, and back to 10/100/1000BASE-T Ethernet at the customer premises.

This network design sets a standard for cost effectiveness. By populating the POP switch with standard 10/100 copper blades instead of long-haul fiber blades, service providers can save thousands of dollars in capital equipment.

Figure 8: By using chassis-based 10/100 autosensing media converters at the point of presence, the service provider can provision a 10-Mbps or 100-Mbps dedicated connection with the existing equipment since the converters provide an upgrade path between the two speeds. As customer needs increase, the bit rate can be increased to 100 Mbps through the POP switch, and the converter will automatically adapt to the increased speed, eliminating a visit to the customer site or POP.

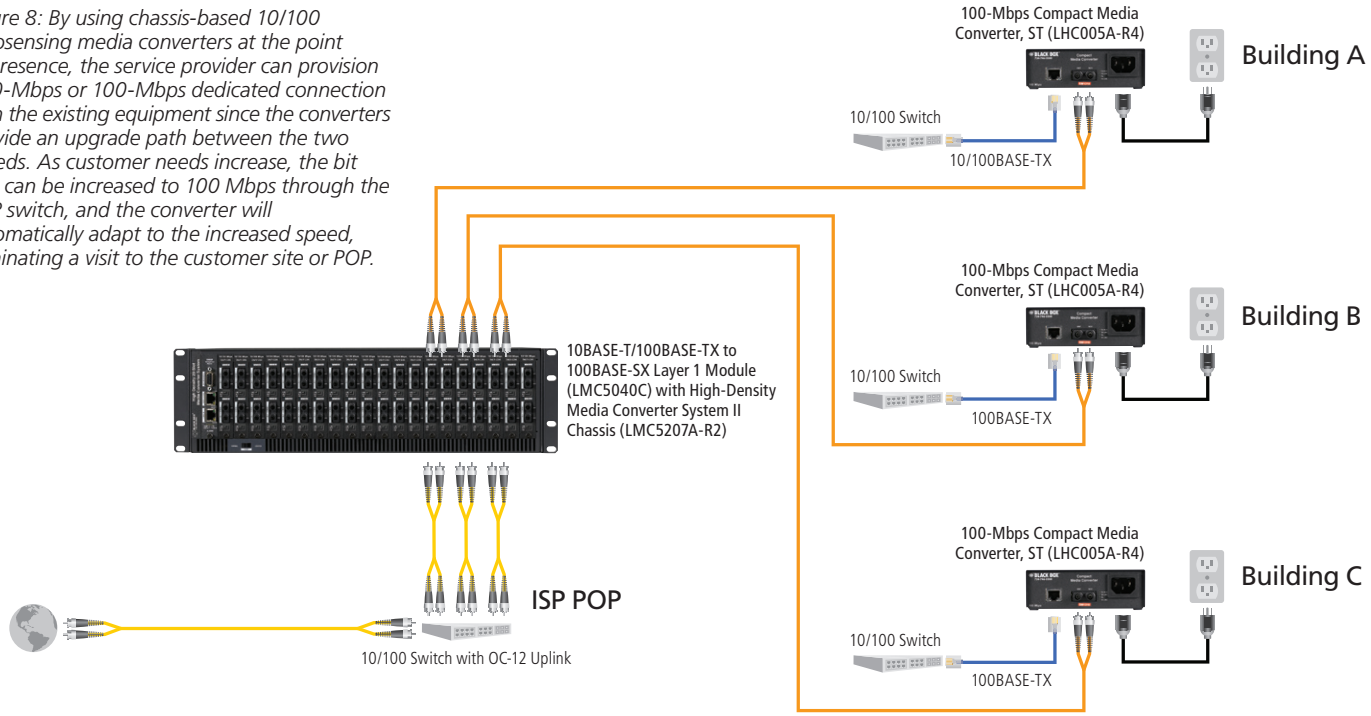

Media Converters are Flexible

Connecting copper switch ports to modular media converters for optical access enables service providers to fully benefit from the flexibility and distance offered by media converters. Media converters support multiple types of media from coax and copper to multimode and single-mode fiber, and support 10-Mbps, 100-Mbps, autosensing 10-/100-Mbps and Gigabit Ethernet. Single-mode converters routinely cover distances of 20, 40, and 80 kilometers with 1310-nm optics, and even up to 130 kilometers with 1550-nm optics.

Media converters can also greatly enhance the consistency of service. With modular media converters, the network administrator can troubleshoot one circuit while the other customer connections remain up and running. On the customer side, a standalone media converter can be used to provision an optical demarcation point, resulting in more cost savings and simplicity because the telco router can be eliminated. Behind the media converter on the network edge, a Layer 2 LAN switch can be used to interconnect the public and private networks. Advanced protocols such as 802.1q, 802.1p, Quality of Service, and network address translation can be handled at the POP switching router.

Need for Management

The ability to manage and monitor media conversions is becoming increasingly important in service provider and outside plant applications. Using managed media conversion, fiber network operators can easily provision service and also minimize network downtime by quickly isolating problems; visits to remote sites are greatly reduced since SNMP management shows exactly where faults reside. To help diagnose problems such as a link loss situation or the loss of one strand of fiber, media converters offer features to constantly monitor system integrity and thus decrease troubleshooting efforts.

Service providers have to be able to proactively manage the circuit to ensure quality and consistency of service, even though they don't own the remote network and don't have access to the customer LAN located miles away. When provisioning dedicated, high-speed data connections between two locations, service providers need to be able to monitor both endpoints as a single SNMP management entity instead of two separate locations. This can be achieved by deploying an optical converter/demarcation unit, such as the Black Box® High-Density Media Converter System II. Installed at the customer LAN edge, the High-Density Media Converter System II can be managed through the fiber uplink port with in-band SNMP that is separate and completely transparent to customer data traffic and other protocols. Remotely managed customer premises equipment such as the High-Density Media Converter System II can alert the service provider to any problems on the long-haul fiber run, and provide data traffic statistics and vital information on the unit and link conditions at the remote site without rolling a truck to the customer site.

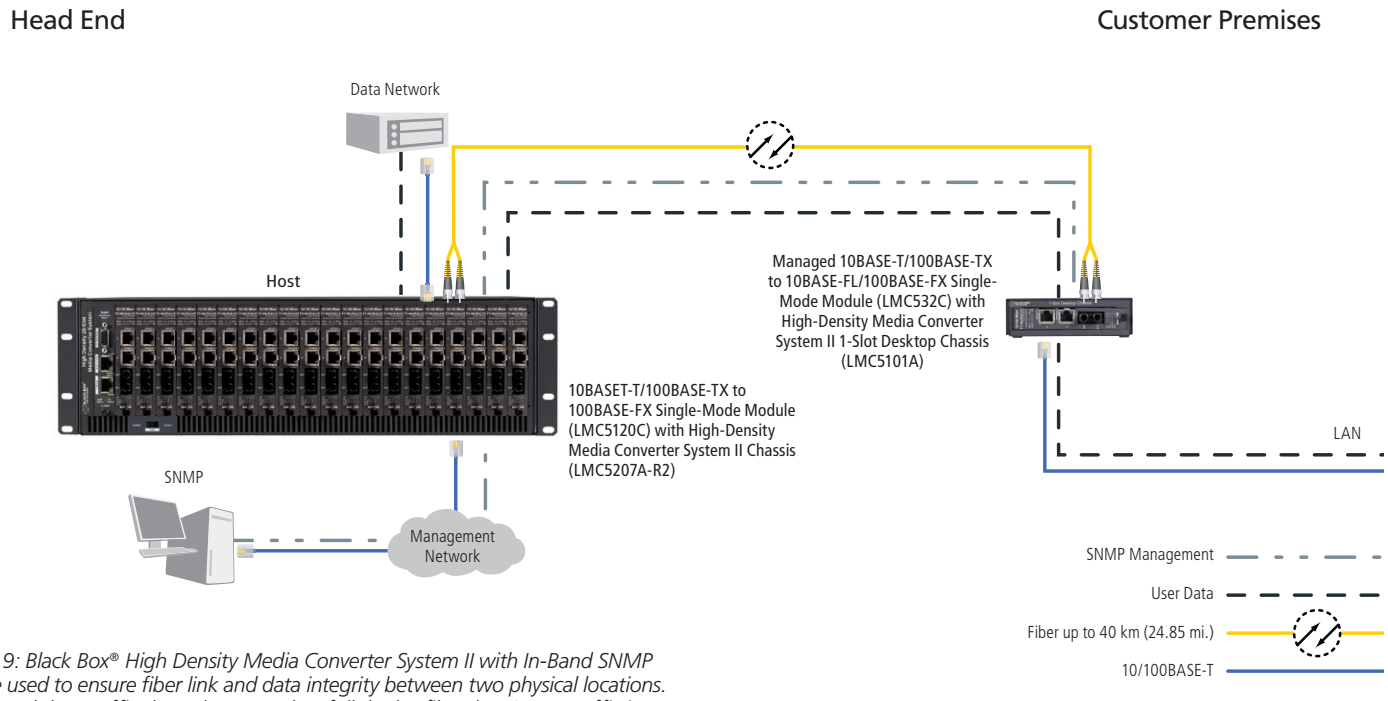

Figure 9: Black Box® High Density Media Converter System II with In-Band SNMP can be used to ensure fiber link and data integrity between two physical locations. SNMP and data traffic share the 100-Mbps full duplex fiber, but SNMP traffic is isolated and remains transparent to the data traffic.

Benefits of Optical Ethernet and Media Converters in the MAN

Tried and proven in the LAN, Ethernet is well positioned to become the protocol of choice for the transport of data, voice, and video also outside the LAN.

» Protocol transparency — service provider supplies the customer a standard Ethernet interface.

» Bit-rate transparency — customer can connect to the service provider network at 10 Mbps, 100 Mbps, or Gigabit Ethernet.

» Ethernet simplifies the network design — a traditional telco router can be replaced with a remotely managed media converter.

» Optical Ethernet services often work with customer's own IP addressing scheme.

» Customers can use the bandwidth they need, when they need it, without the wait associated with legacy services.

» Using media converters with Ethernet-based services minimizes the cost of provisioning and maintaining optical circuits.

Conclusion

Fiber optics is the only medium that can support a virtually limitless bandwidth and can break the bottleneck that still exists between the customer premises and the service provider point of presence. The demand for fiber connections continues to grow parallel with the continuing demand for more bandwidth and introduction of new applications.

Where customers have access to carrier dark fiber, optical Ethernet makes sense because of its low cost, simplicity, and scalability. Bit-for-bit, Ethernet is the undisputed heavyweight champion of the high-speed IP and metro access services. With new evolving standards, Ethernet is also destined to become the dominant protocol outside the LAN in the MAN access and long-haul WAN market spaces.

Tried and proven in the LAN, media converters are now lighting up the first mile with optical Ethernet services. The bottom line is that media converters make practical sense in both LAN and MAN applications. Simple and robust in design yet cost-effective to deploy, media converters are the best solution for the optical demarcation between the LAN and MAN and bridging the bandwidth gap that exists between the LAN and service provider fiber optic backbone.

Standalone Converters

MultiPower Miniature Media Converters are small, rugged, and can be powered several different ways.

Modular Chassis Systems

SNMP manageable chassis systems enable the use of a variety of modular media converters, and the combining of multiple protocols and media types in one rack-mountable chassis.

PC Card Converters

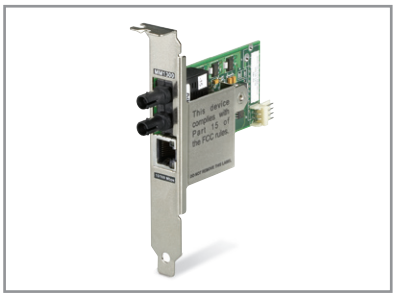

Deploying fiber-to-the-desktop is easy with a media converter that fits in a PC's PCI or ISA slot.

About Black Box

Black Box is the world's largest technical services company dedicated to designing, building, and maintaining today's complicated data networking services and voice infrastructure systems. Black Box services 175,000 clients in 141 countries with 191 offices throughout the world. Black Box is ISO 9001:2000 certified. Black Box provides more than 118,000 networking and infrastructure products, such as fiber, CAT5e, and CAT6 cable; KVM switches; digital signage; and cabinets and racks, plus network services. To learn more, visit the Black Box Web site at http://www.blackbox.com.

© Copyright 2009. All rights reserved. Black Box® and the Double Diamond logo are registered trademarks of BB Technologies, Inc. Any third-party trademarks appearing in this White Paper are acknowledged to be the property of their respective owners.